A case study in optics manufacturing with MoveIt 2 and ros2_control

20 October 2022, ROSCon 2022

Stephanie Eng
PickNik Robotics
stephanie.eng@picknik.ai

Joshua Beck
Optimax SI
jbeck@optimaxsi.com

Andy Zelenak
PickNik Robotics
zelenak@picknik.ai

PICKNIK

Outline

1. Introduction
2. Problem statement
3. Release of abb_ros2: a ROS2 driver for ABB robot arms
4. Trajectory smoothing with Ruckig

PICKNIK

Who we are

Stephanie Eng
PickNik

Joshua Beck
Optimax

Andy Zelenak
PickNik

PICKNIK

OPTICS
IN SPACE

OPTIMAX ON BOARD

Mars Rovers, Pluto New Horizons, Tess, ROMAN, Mercury Messenger, International Space Station…

Introduction: PickNik

- PickNik helps companies with the development of advanced robotic applications
- PickNik collaborates with the open source robotics movement and
- Is the lead developer of MoveIt

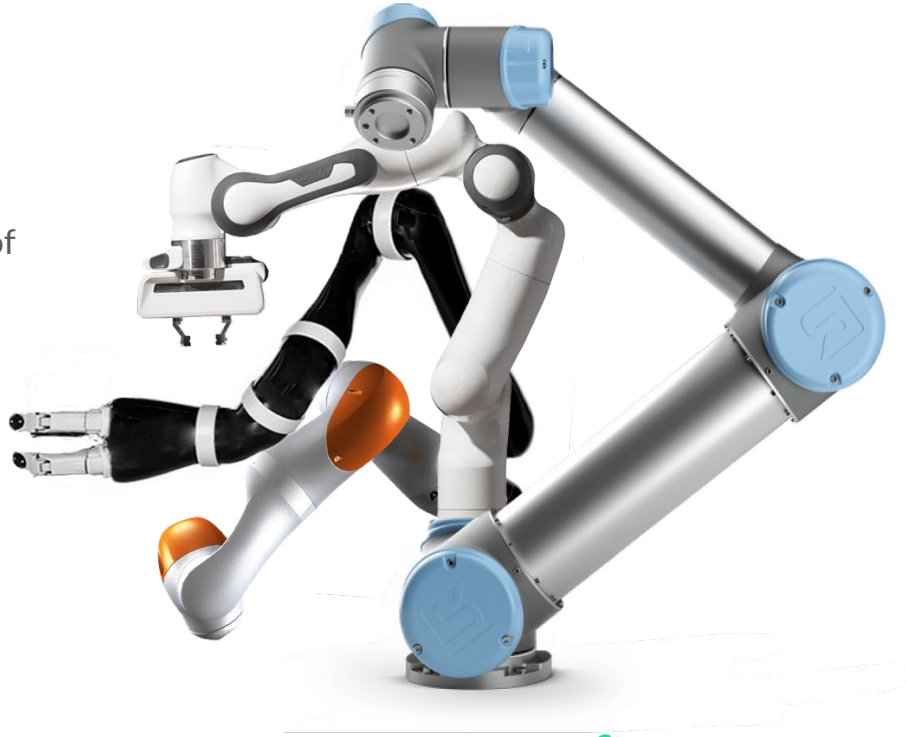

PICKNIK

Application

- Optimax + PickNik collaboration: integrate ROS2 manufacture of freeform optics
- Freeform optics: optics that are not rotationally symmetric
- Manufacturing process
  - Machine rough shape of optic using bound abrasive tooling on a 5-axis mill
  - Iterative polish-measure loop with ABB industrial arm and freeform metrology tools
  - Final smoothing performed on a UR or ABB robot
    - Reduce mid-spatial frequency errors induced during generation and polishing

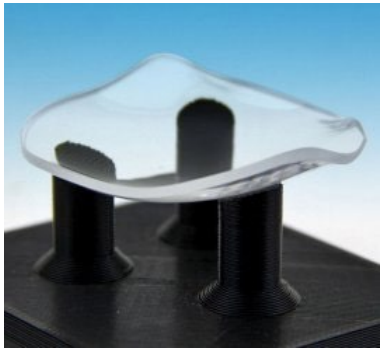

PICKNIK

Existing ROS 1 Architecture

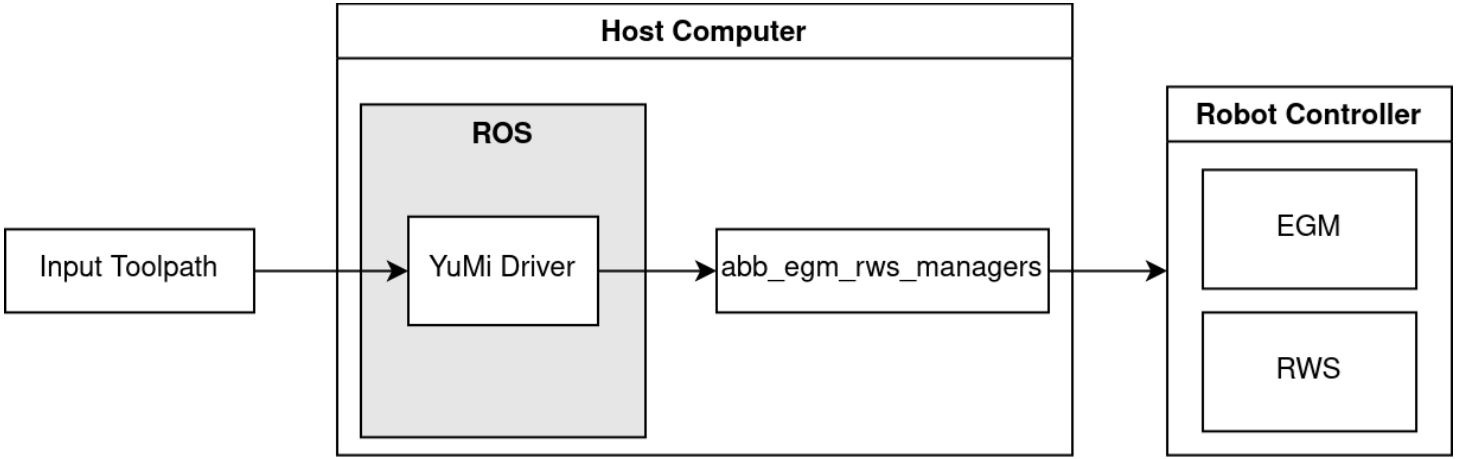

PICKNIK

Existing ROS 1 Architecture

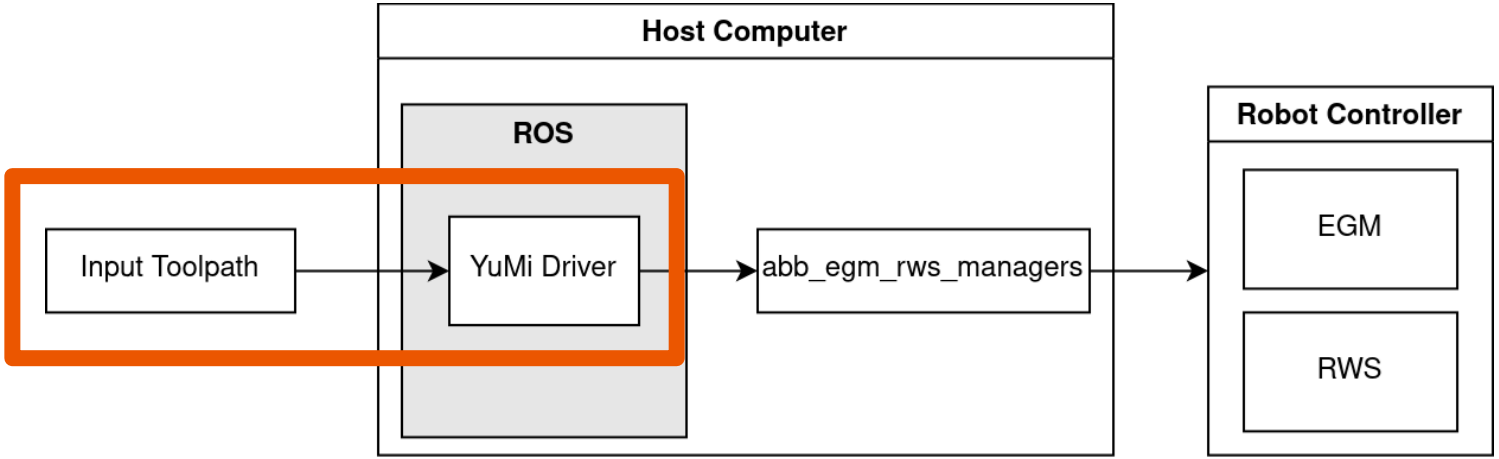

PICKNIK

New ROS 2 Architecture

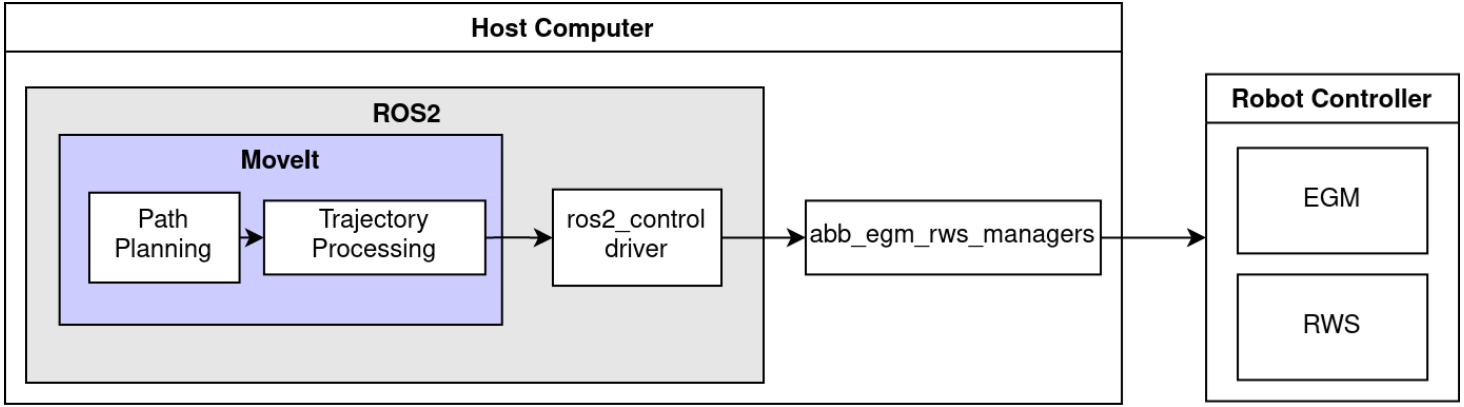

PICKNIK

New ROS 2 Architecture

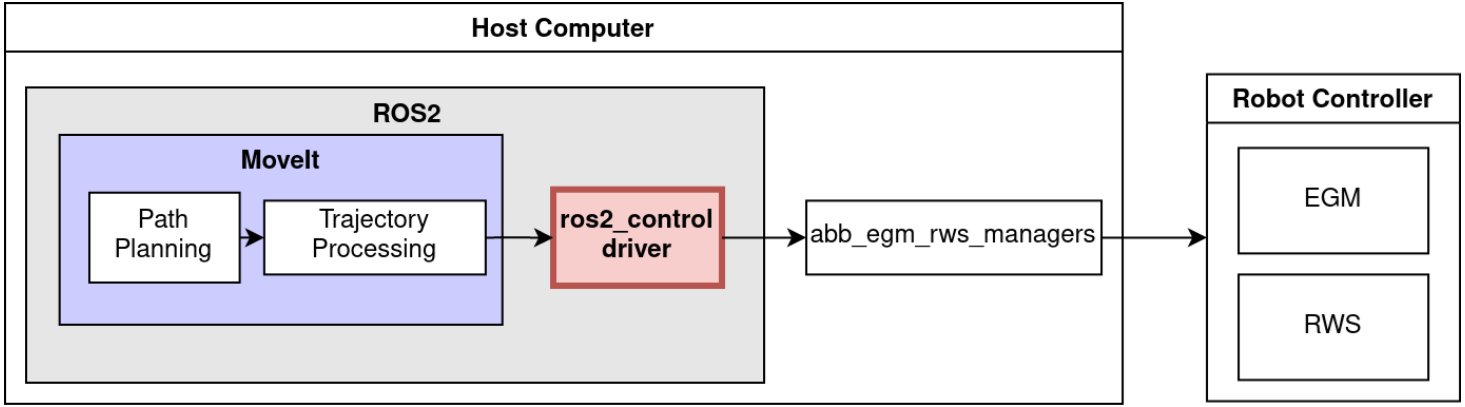

- Fork of the ROS1 driver had jerky motion and severe latency
- Desire to move to ROS2 for better long term support and use of ros2_controllers

PICKNIK

abb_ros2

- Optimax and PickNik have collaborated to develop a ros2_control driver for ABB arms
- Open source, supports the IRB 1200 5/0.9

https://github.com/PickNikRobotics/abb_ros2

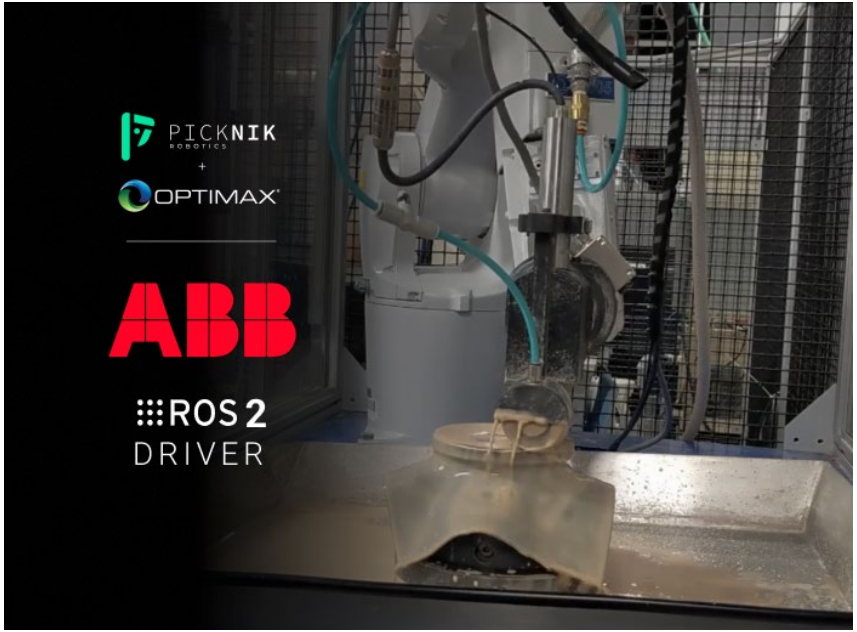

PICKNIK

Code interfacing with Hardware

- Started from a proof-of-concept ros2_control driver
- Initial driver used ros2_control to read and write commands to and from the robot's externally guided motion (EGM) interface
- Started off by testing with RobotStudio
  - Used this to ensure we had the proper network setup and proper RAPID program
- Added communication to Robot Web Services (RWS)

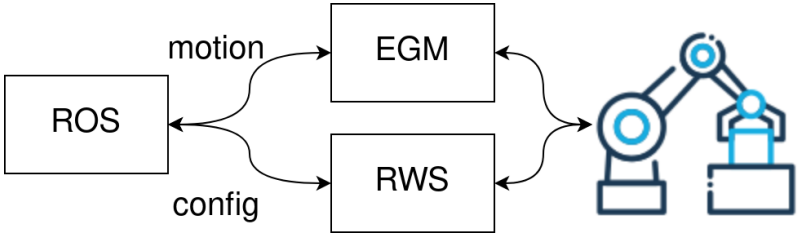

PICKNIK

Code interfacing with ROS

- motion_data
- Functions a ros2_control driver should implement:
  - on_init
  - export_state_interfaces
    export_command_interfaces
  - on_activate
  - read
  - write

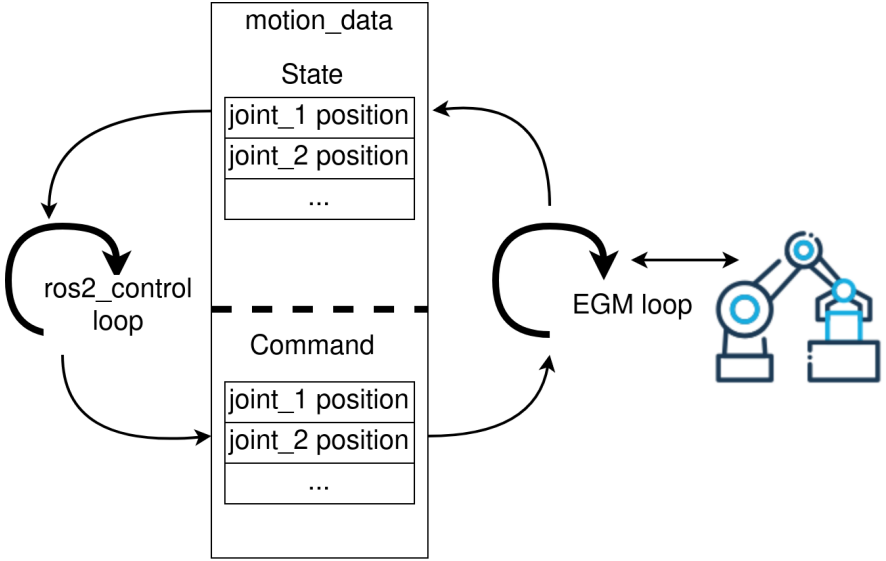

PICKNIK

Productizing the project

- Created abb_bringup to hold launchfiles and configurations
  - abb_control.launch.py
  - abb_moveit.launch.py
- Added CI
- Improved documentation

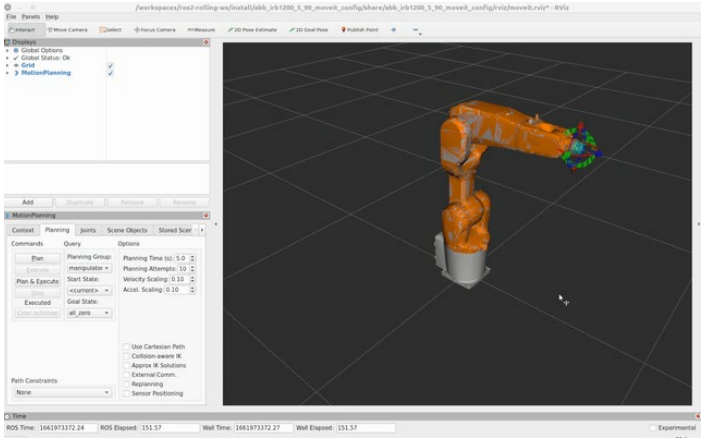

stephanie-eng Fix typo in docs (#41) d1c3a5b 6 days ago History

..		
images	Documentation reorganization (#10)	5 months ago
NetworkingConfiguration.md	Add CI (#18)	5 months ago
README.md	Fix typo in docs (#41)	6 days ago
RWSQuickStart.md	Add RWS Client (#14)	2 months ago
RobotStudioSetup.md	Add CI (#18)	5 months ago
Troubleshooting.md	Add CI (#18)	5 months ago

PICKNIK

New driver functionality

- Spoof ros2_control drivers for simulation in ROS
- Communicate with ABB RobotStudio or directly with an ABB robot
- Support for external axes using MultiMove
- RWS integration for StateMachine and IO manipulation
- Some robot models already supported, more to come

New driver functionality

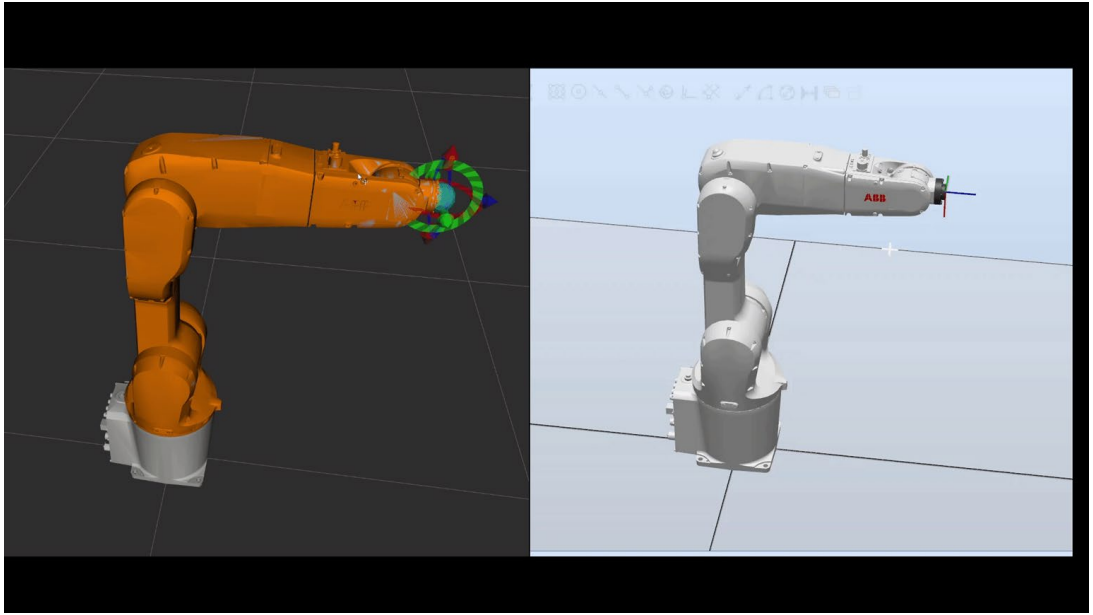

PICKNIK

Toolpath Issues

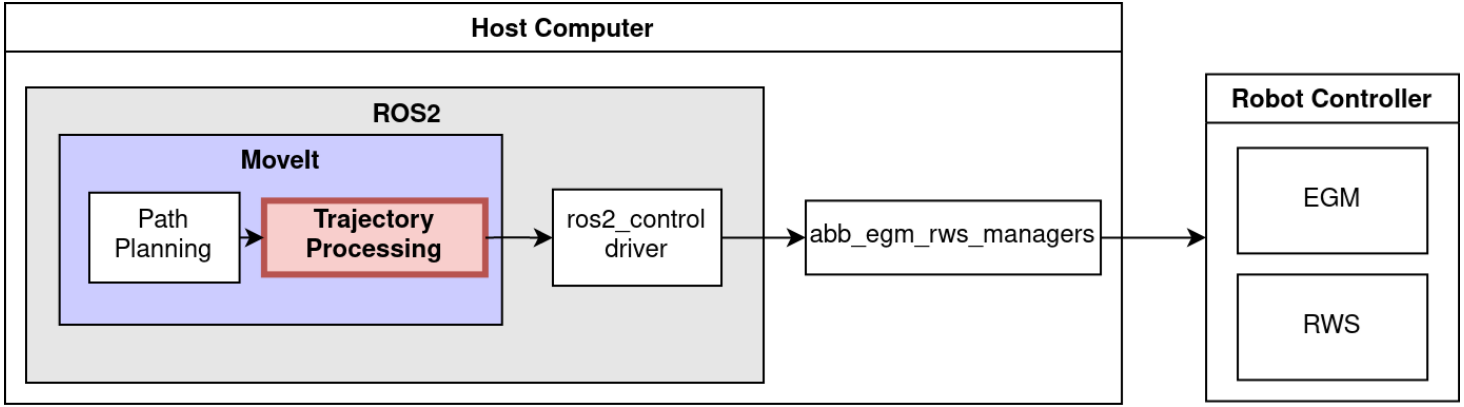

- Lack of trajectory processing on input toolpath: jerky motion
- Input toolpaths of up to 500 000 waypoints caused latency

PICKNIK

Ruckig

- Trajectory generator that respects jerk limits
  - Jerk is the derivative of acceleration
  - High jerk is hard on the actuators and can cause robot protective stops

- Ruckig generates a trajectory with respect to (velocity/acceleration/jerk) limits, lengthening the trajectory in time as required

PICKNIK

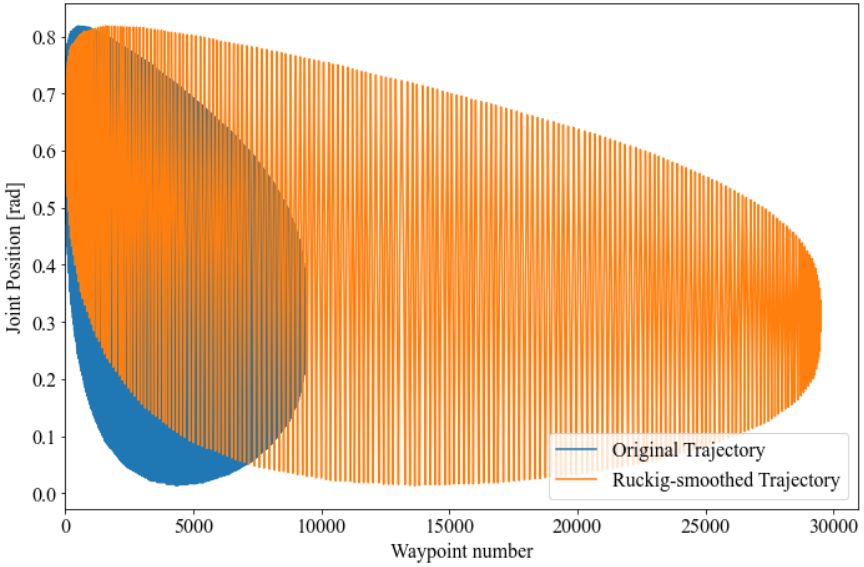

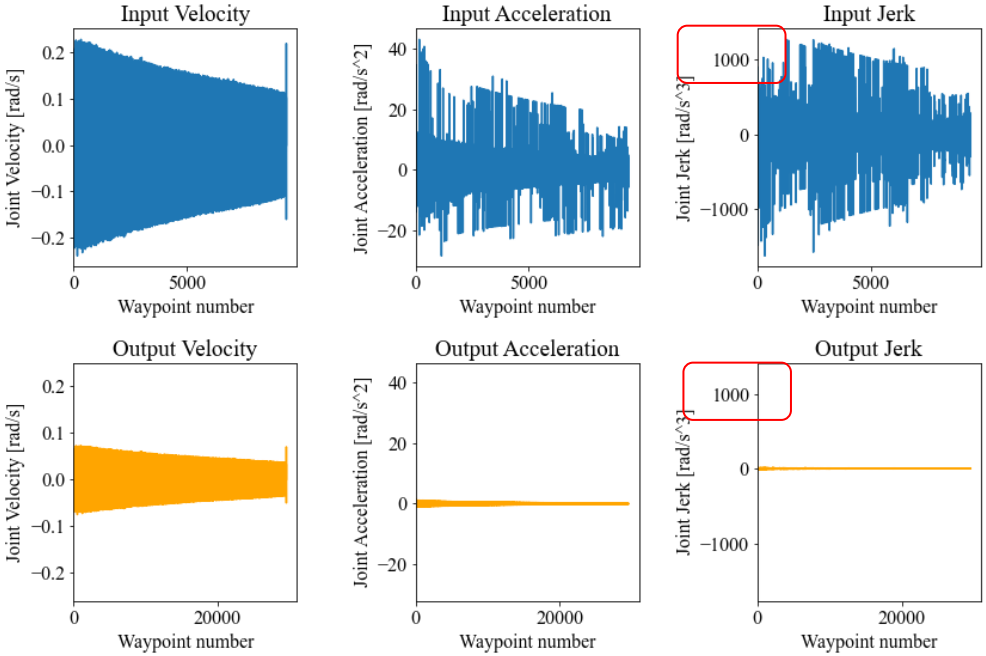

Jerk decreased from 1000 rad/s^3 to 10 rad/s^3

PICKNIK

Ruckig Pipeline

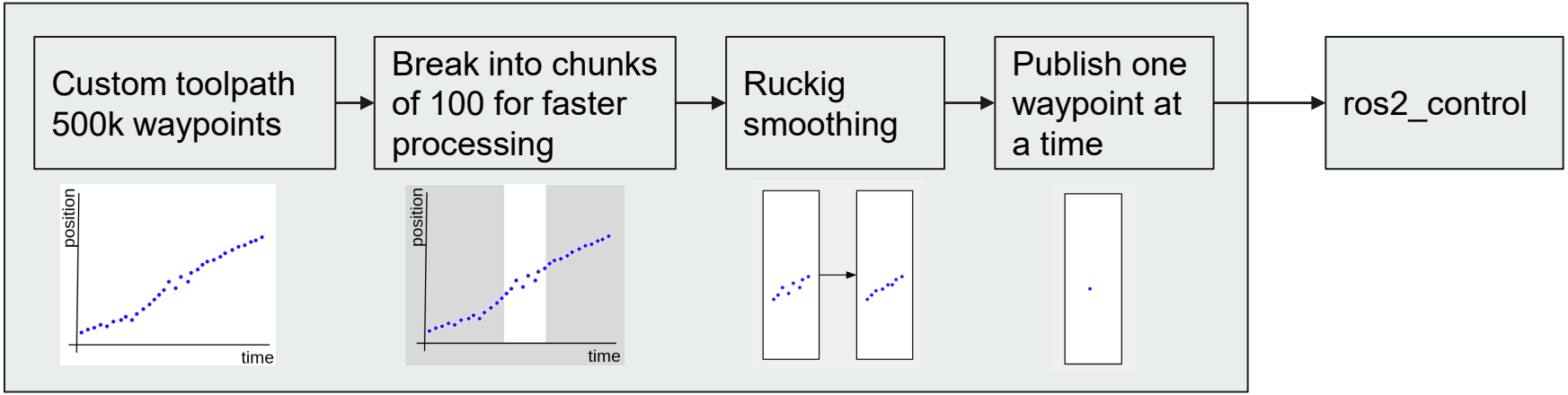

Optimax Application

PICKNIK

MoveIt Usage

- Ruckig is easy to use with the OMPL motion planning pipeline of MoveIt
- In other words, the default motion planning that almost everybody uses
- Add this to the beginning of your ompl_planning.yaml (ROS2 Humble/Rolling)

```
    request_adapters      :  >-
      default_planner_request_adapters/AddRuckigTrajectorySmoothing
```

PICKNIK

Hardware Testing

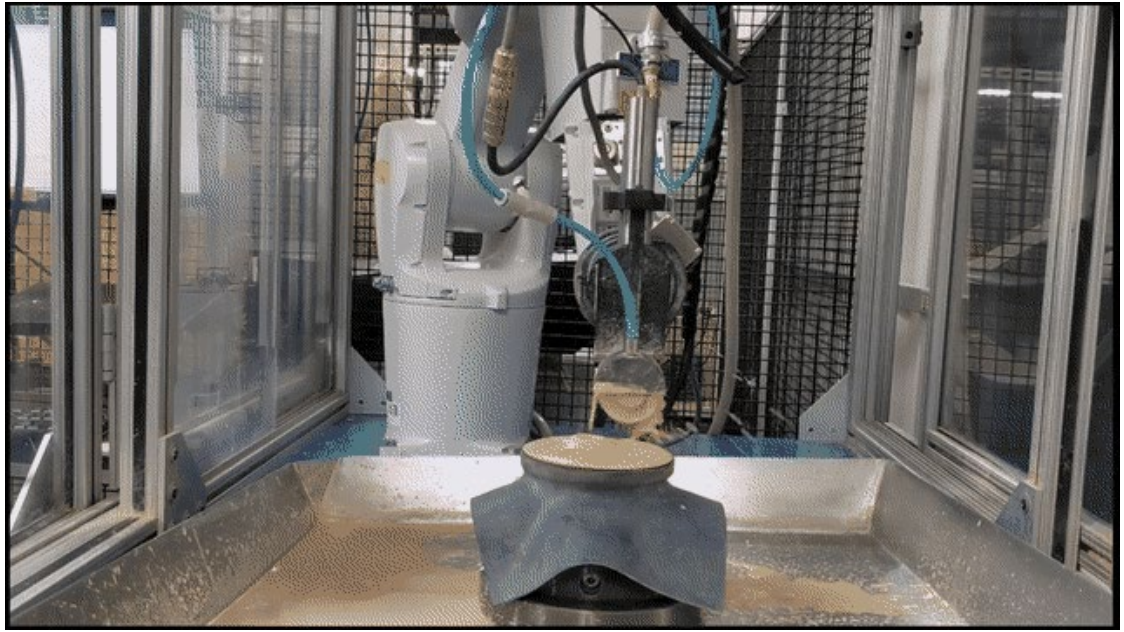

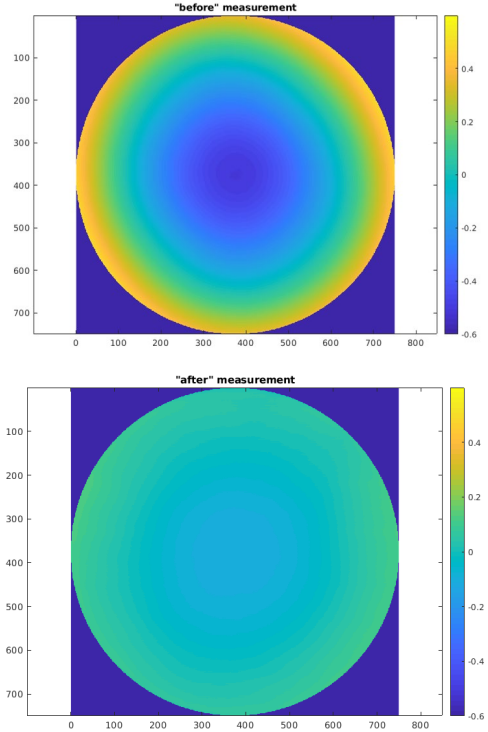

A 53% reduction in deviation!

Thank you for listening!

PICKNIK